ELEGOO

Mercury 3.0 Plus Washing And Curing Machine

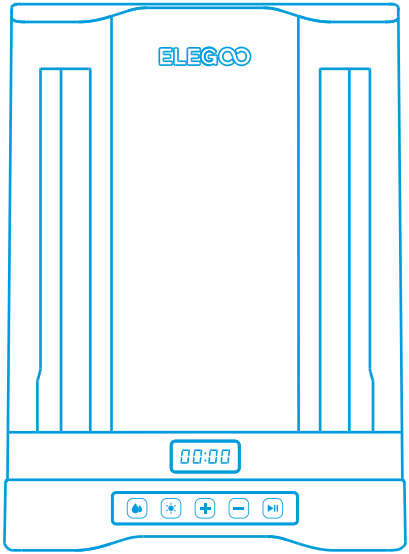

User Manual

Thank you for purchasing ELEGOO brand products.

V1

After receiving the product, please confirm whether the equipment is intact and the accessories are complete. If there is any damage or missing, please timely contact us at 3dp@elegoo.com. (To ensure the performance of each product, each product will undergo strict tests before leaving the factory. There may be some slight scratches when you receive the product, which is normal, please rest assured to use.)

Notice

- Please keep the Wash & Cure Machine and its accessories out of the reach of children.

- After prolonged use of the curing chamber, the surface temperature of the machine will increase, which is a normal phenomenon.

- Please keep the original packaging box for 30 days for return/exchange (only ELEGOO original packaging boxes are accepted).

- Excessive curing can cause the model to turn yellow. Please adjust the curing time appropriately to ensure optimal curing results.

- Please use 95% (or higher) ethyl alcohol or isopropyl alcohol to wash your model unless you are using water washable resin.

- Do not directly place the model in the cleaning bucket for cleaning. Use a cleaning basket instead.

- Add an appropriate amount of cleaning solution to the cleaning bucket to avoid overflow. Always close the bucket lid after use.

- Please wash and dry the model before curing. Neglecting this step may lead to white residues on the model's surface and potential issues such as stickiness or cracking.

- During the washing process, ensure that the cleaning bucket contains an adequate amount of cleaning solution. Regularly filter or replace the cleaning solution and clean the cleaning bucket to prevent the impeller from jamming or damaging the machine.

- If you have any problems with the machine, please contact us at 3dp@elegoo.com. Please do not disassemble or modify the Mercury 3.0 Plus Washing And Curing Machine by yourself, otherwise, the warranty will expire.

Contents

Packing List ---------- 01

Machine Introduction ---------- 02

Machine Tech Specs ---------- 03

Product Overview ---------- 04

Washing Mode Operation Steps ---------- 05

Curing Mode Operation Steps ---------- 08

Routine Maintenance ---------- 09

FAQ ---------- 11

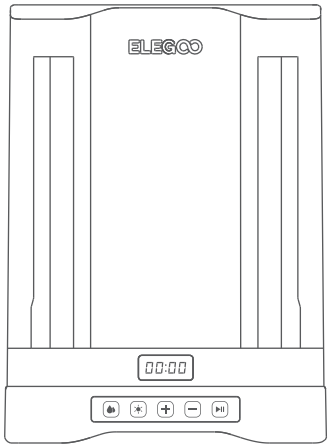

Mercury 3.0 Plus
Washing And Curing Machine

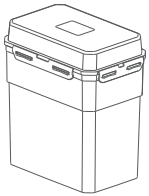

Cleaning Bucket

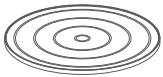

Curing Turntable

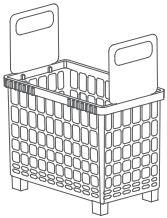

Cleaning Basket

Adjustable Bracket ×2

User Manual

Tools

Power Adapter

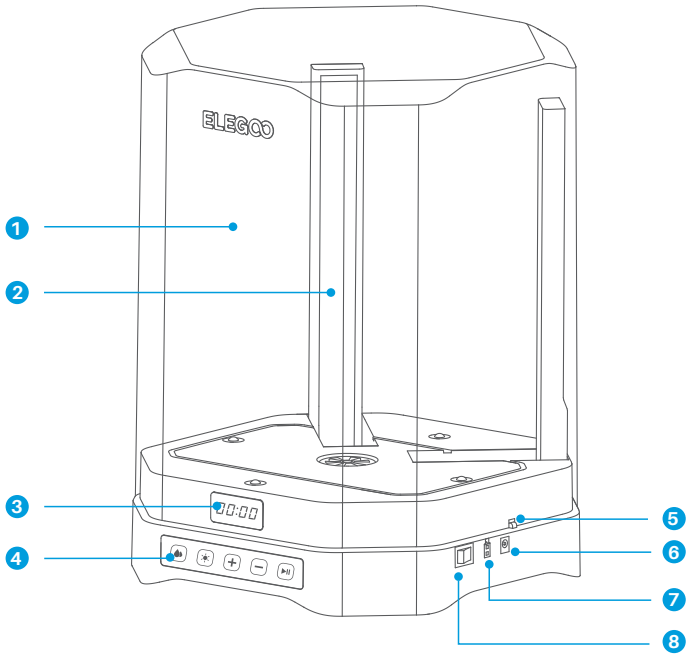

1 Anti-UV Cover

2 UV Lamp Column

3 Display Screen

4 Control Panel

5 Sensor

6 DC Socket

7 Expansion Port

8 Switch

Machine Parameter

- Control Method: Touch Button
- Power Requirements: 100-240V 50/60Hz 24V 2.5A

Machine Specification

- Dimension: 302.5mm(L)*302.5mm(W)*412.5mm(H)
- Package Size: 358mm(L)*358mm(W)*470mm(H)
- Gross Weight: 6.2KG
- Net Weight: 4.7KG

Washing and Curing Specification

- Maximum Washing Volume: 214mm (L)*135mm (W)*180mm (H) (with build plate)
  230mm (L)*135mm (W)*260mm (H) (without build plate)
- Maximum Curing Size: ∅250mm*290mm(H)
- Time Setting: 0-30 minutes
- Curing Time Setting: For models with a diameter smaller than 30mm, it is recommended to set the curing time to 2 minutes. If the model structure is complex, it is advised to increase the curing time accordingly.

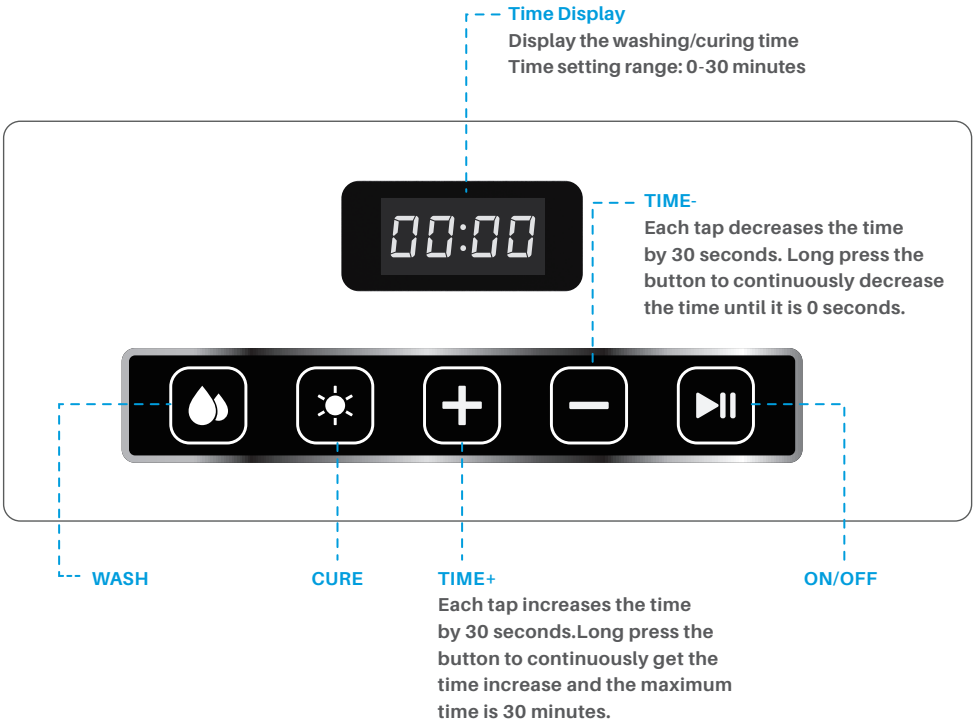
Time Display
Display the washing/curing time
Time setting range: 0-30 minutes
00:00
TIME-
Each tap decreases the time by 30 seconds. Long press the button to continuously decrease the time until it is 0 seconds.
WASH
CURE
TIME+
Each tap increases the time by 30 seconds.Long press the button to continuously get the time increase and the maximum time is 30 minutes.
ON/OFF

The Mercury 3.0 Plus Washing And Curing Machine has “Washing Mode” and “Curing Mode.” Please connect the power and turn on the power switch before use.

1. Washing Mode

1.1 Switch the machine to washing mode by touching “ ” on the control panel.

1.2 Place the cleaning bucket in the positioning groove on the machine platform (remove the turntable in advance) and open the sealed lid of the cleaning bucket. Add an appropriate amount of cleaning solution. (See Picture 1)

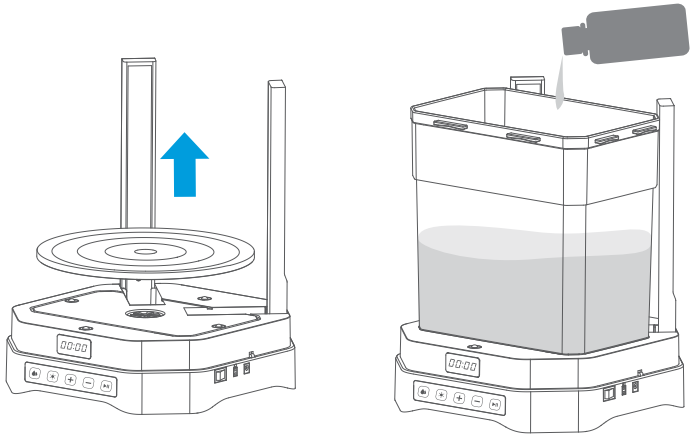

(Picture 1)

1.3 Placing models: With build plate and without build plate

1.3.1 Placing models with a build plate: Put the cleaning basket into the cleaning bucket (place the adjustable brackets in the corresponding protrusions on the side of the cleaning basket in advance). Place the model (size smaller than or equal to 214mm(L)*135mm(W)*180mm(H)) on the adjustable brackets together with the build plate. Adjust the positions of the brackets manually to fit different-sized build plates (10-inch or smaller, with a maximum model height of 180mm on the build plate). Then cover the bucket lid. (See Picture 2)

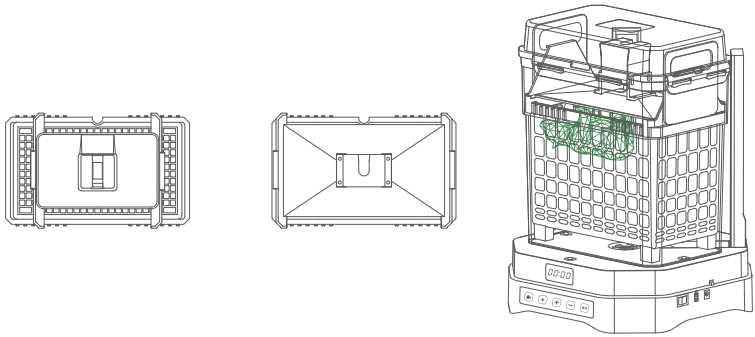

(Picture 2)

1.3.2 Placing models without a build plate: Put the cleaning basket into the cleaning bucket (remove the adjustable brackets from the cleaning basket). Remove the model from the build plate (model size smaller than or equal to 230mm(L)*135mm(W)*260mm(H)) and place it in the cleaning basket. Then cover the bucket lid. (See Picture 3)

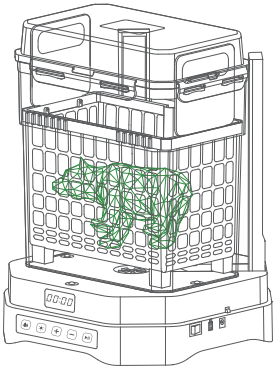

(Picture 3)

1.4 Use the " + " or " − " buttons to set the washing time and touch " ▶II " to start cleaning the model.

1.5 After cleaning is completed, the machine will emit a prompt sound. Take out the model for air drying, remove the cleaning bucket, and seal it with the lid (the cleaning solution can be used multiple times). If the cleaning solution splashes onto the machine surface, clean it promptly to avoid it flowing into the internal components and causing a short circuit.

2. Curing Mode

2.1 Switch the machine to curing mode by touching the " ☀ " on the panel.

2.2 Remove the protective film from the reflective mirrors(❶ ❷) on both sides of the platform. Place the turntable on the central positioning groove of the machine (remove the cleaning bucket in advance). (See Picture 4)

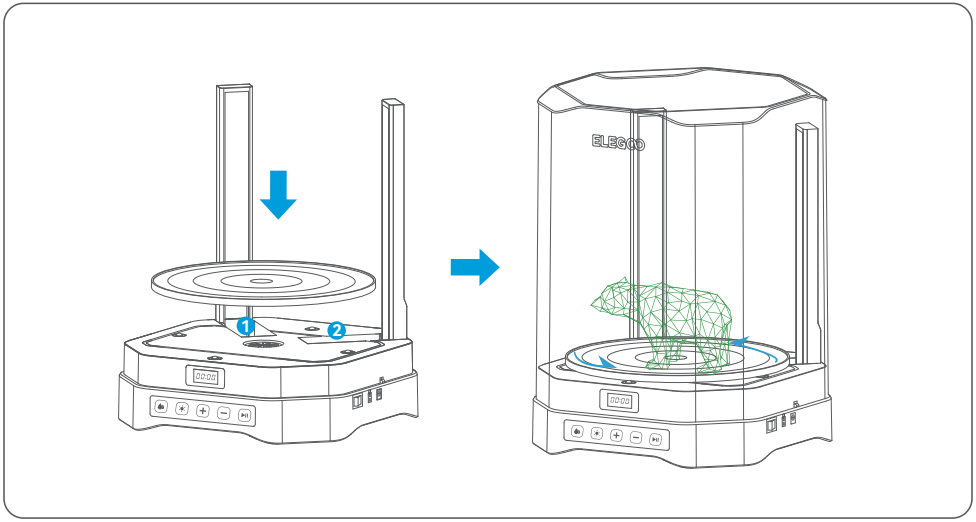

(Picture 4)

2.3 Place the model in the center of the turntable.

2.4 Cover the anti-UV cover. Use the " + " or " − " buttons to set the curing time and touch " ▶II " to start curing the model. Slight shaking is normal during curing due to the slow rotation speed of the turntable.

2.5 After curing is completed, the machine will emit a prompt sound.

1. Recycling the Cleaning Solution

When the cleaning solution in the bucket becomes difficult to clean the models after multiple uses, you need to filter the cleaning solution and clean the cleaning bucket. Let the cleaning solution settle for about 10 hours to allow the solid particles to sink to the bottom of the bucket. Then, slowly pour the upper layer of clear cleaning solution into another storage container, and clean the sediment left at the bottom of the bucket (the sediment will transform into ordinary solid waste when exposed to sunlight) (See Picture 5). If necessary, remove the impeller from the bucket for cleaning.

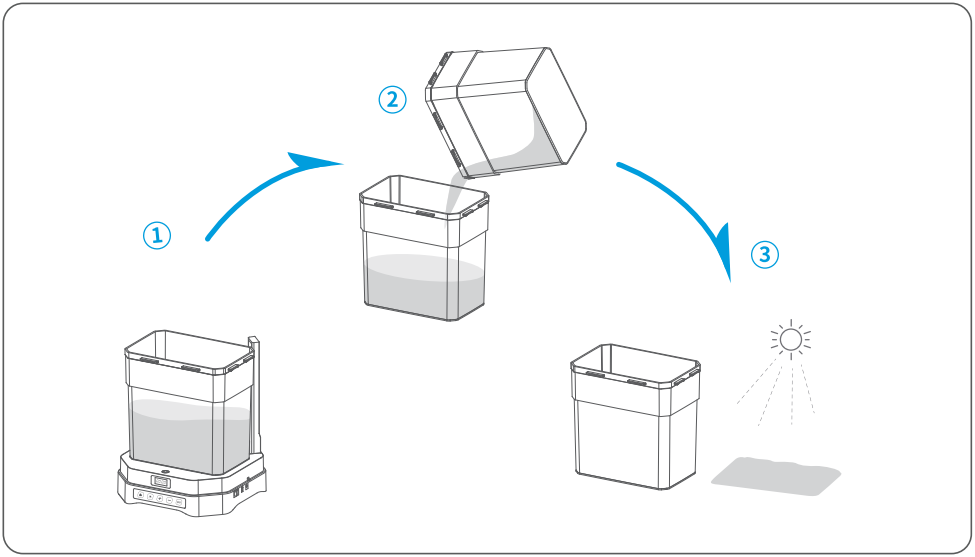

(Picture 5)

2. Cleaning the Impeller of the Cleaning Bucket

After using the cleaning bucket for a period of time, the impeller at the bottom may experience abnormal rotation due to sediment buildup. In this case, the impeller needs to be removed for cleaning. (See Picture 6)

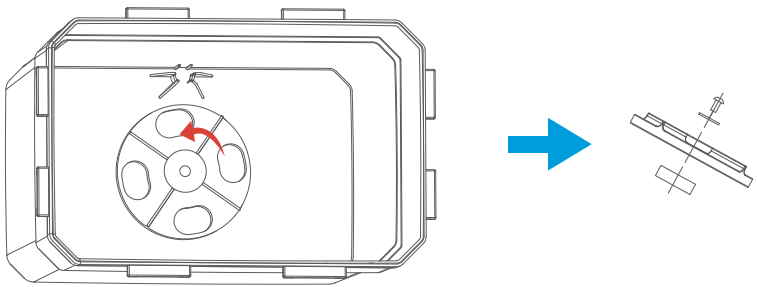

(Picture 6)

1. Machine not working in curing mode.

The anti-UV cover is not properly closed. Please close the cover and try again.

Poor power connection. Please unplug the power cord and plug it back in, then try again.

2. Model turns white after cleaning or curing.

The model was not air-dried before curing. Please wait for the model surface to dry before curing.

The cleaning solution has been used too many times or the alcohol concentration is insufficient.

For better cleaning results, please replace the cleaning solution or use 95% (or higher) isopropyl alcohol.

3. The impeller of the cleaning bucket does not rotate during operation.

The impeller may be obstructed by foreign objects. Please remove the impeller for cleaning and try again.

There is too much sediment in the cleaning solution. Clean the sediment in the cleaning solution or replace the cleaning solution, then try again.

4. Unusual noises from the cleaning bucket during operation.

The fixing screws of the impeller may be loose. Please use a tool to tighten the screws.

● Telephone--0755-21005141
● Mailbox--3dp@elegoo.com
● Website--www.ELEGOO.com
● Address--101, No.30 Dahe Industrial Park,
Guancheng Community, Guanhu Street,
Longhua District, Shenzhen, China

ELEGOO